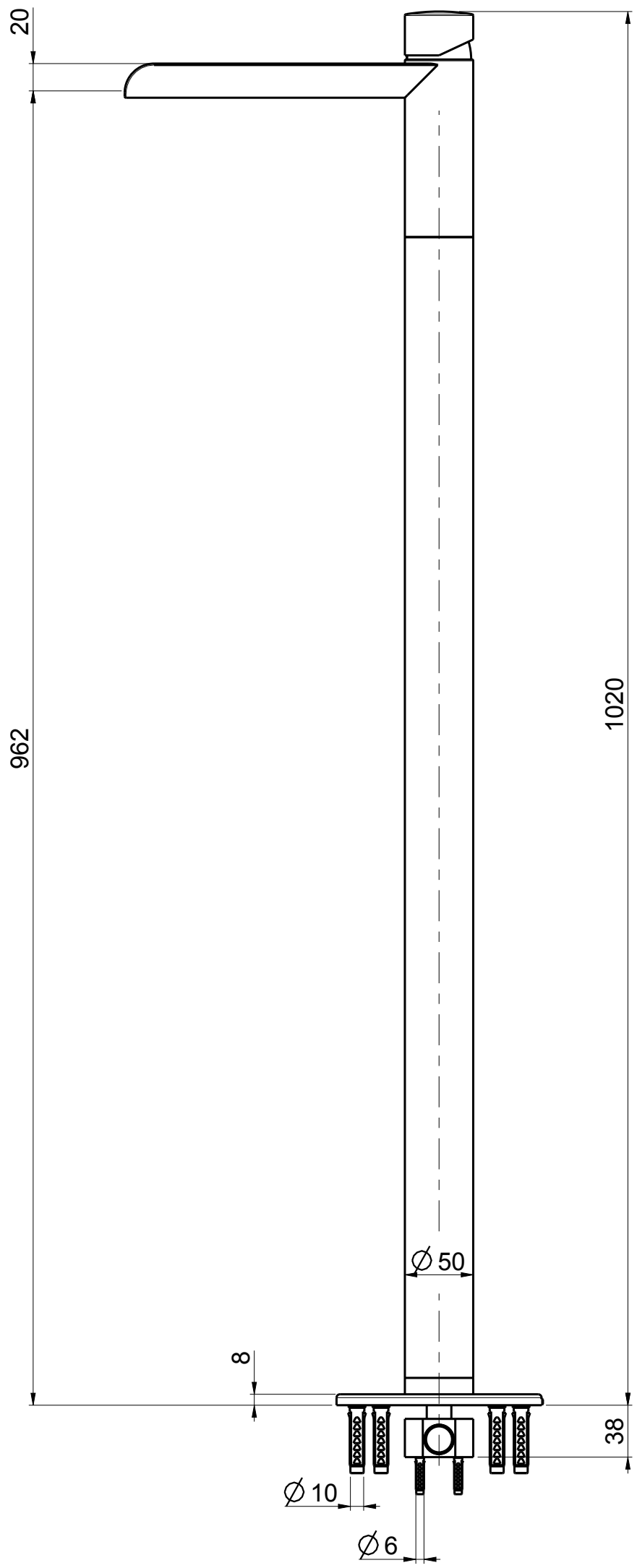
20
962
1020
∅50
8
38
∅10
∅6

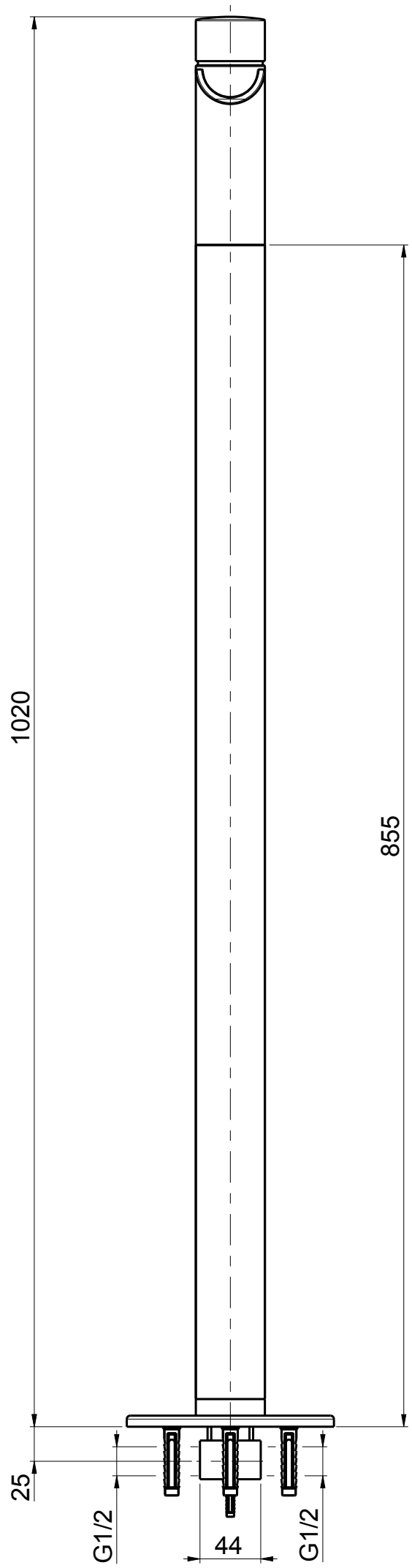
1020
855
25
G1/2
44
G1/2

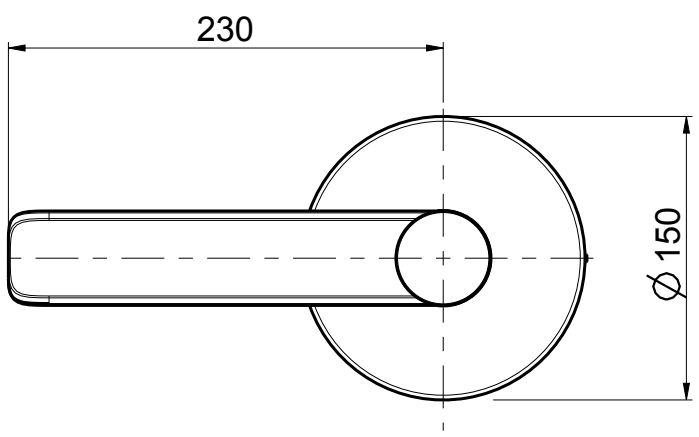
230
∅150