SCHEDA TECNICA TECHNICAL FEATURES

ART. COD. **QT 95C**

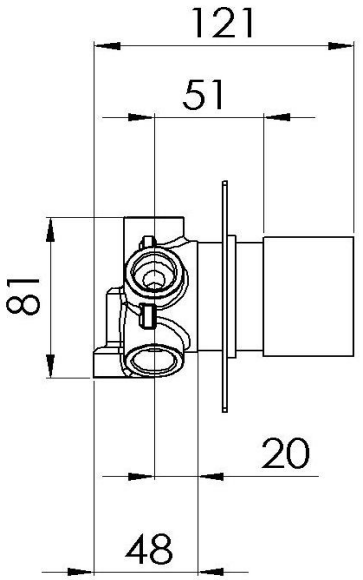

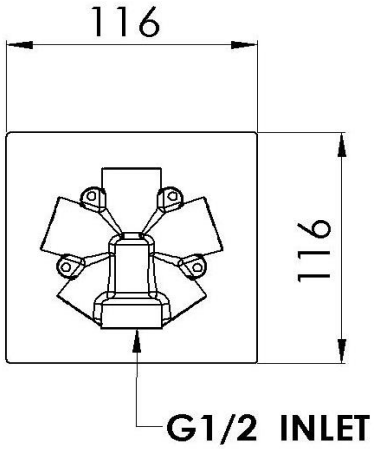

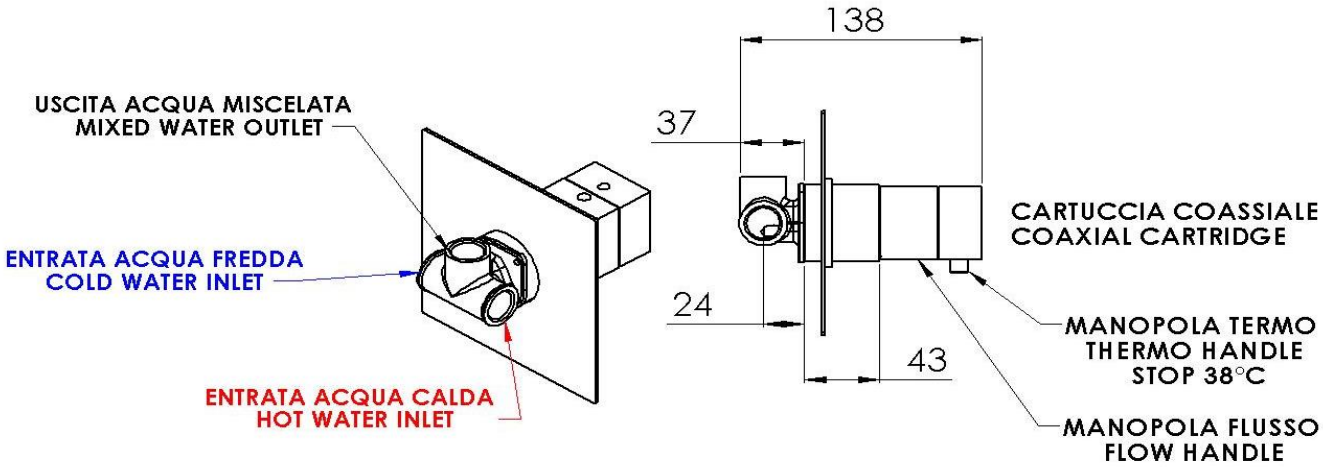

MATERIALI / MATERIALS

OTTONE CROMATO / CHROME PLATED BRASS

CROMATURA / CHROME PLATING

UNI EN 248

Via Leonardo da Vinci 83 20062 Cassano d'Adda (MI) Italy Tel. +39-0363 364211
info@remer.eu www.remer.eu